Parker domnick hunter

DAIRY

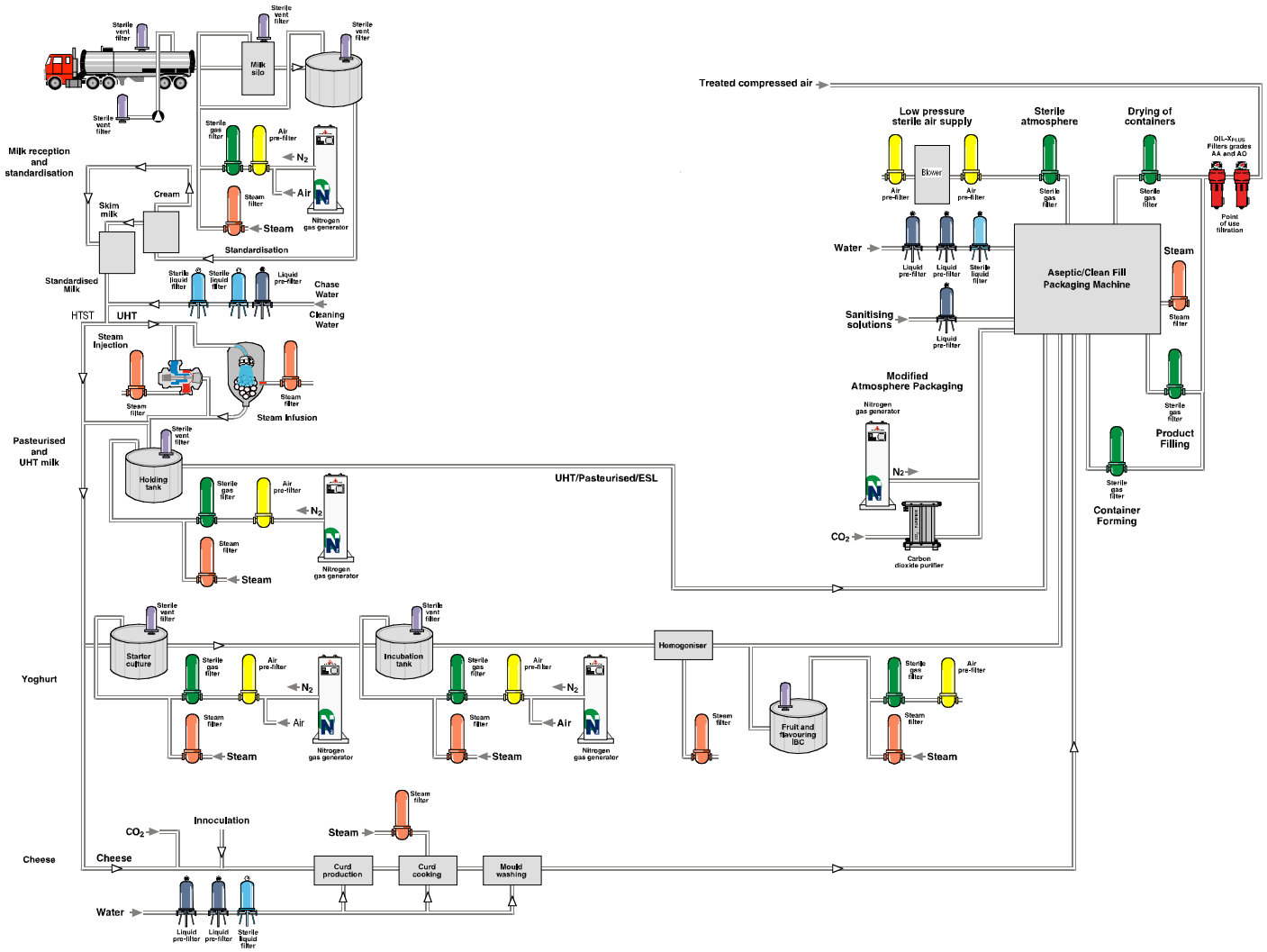

ENGINEERING YOUR SUCCESS.

© +44 (0)191 4105121 dhprocess@parker.com www.domnick hunter.com

Parker domnick hunter has a continuous policy of product development and although the Company reserves the right to change specifications, it attempts to keep customers informed of any alterations. This publication is for general information only and customers are requested to contact our Process Filtration Sales Department for detailed information and advice on a products suitability for specific applications. All products are sold subject to the company's Standard conditions of sale.